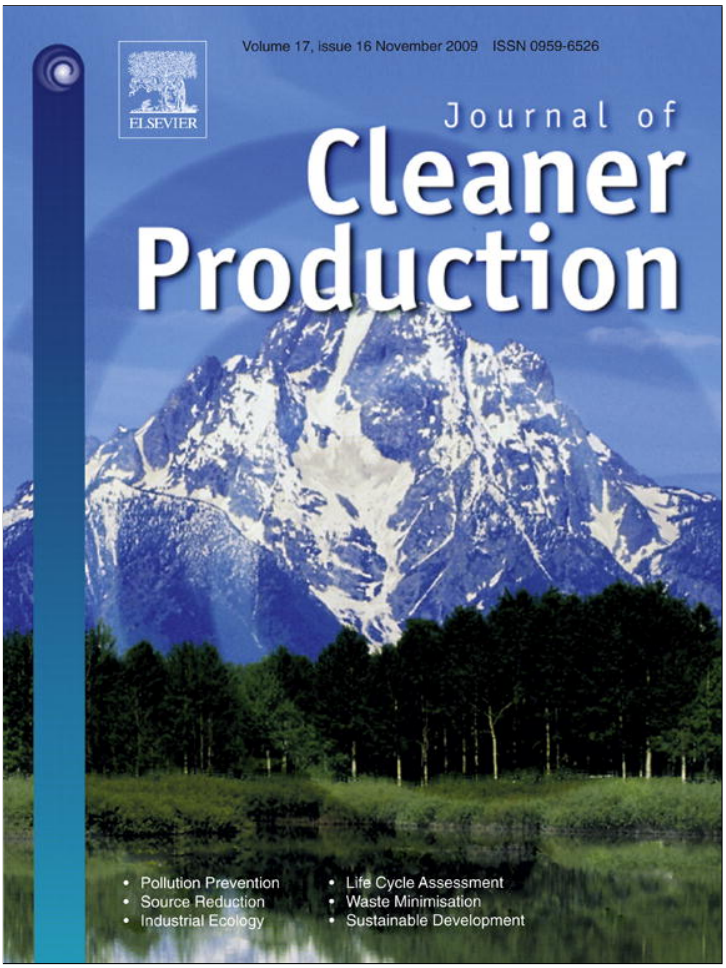

Journal of Cleaner Production 17 (2009) 1512–1525

Contents lists available at ScienceDirect

Journal of Cleaner Production

journal homepage: www.elsevier.com/locate/jclepro

Mitigation of energy intensity of an industrial off-gas cleaning system using process engineering solutions

Antonio C.B. de Araujo [a,*], Romildo P. Brito [a], Helen Shang [b]

[a] Chemical Engineering Department, Federal University of Campina Grande, 58429-900 Campina Grande, Paraiba, Brazil
[b] School of Engineering, Laurentian University, P3E 2C6 Sudbury, Ontario, Canada

ARTICLE INFO

Article history:
Received 14 October 2008
Received in revised form
28 May 2009
Accepted 28 May 2009
Available online 13 June 2009

Keywords:
Smelter furnace
Off-gas system
Energy intensity
Optimization
Controlled variable selection
Control structure

ABSTRACT

In smelting processes, a large amount of off-gas emission is often generated, which can cause serious environmental and plant hygiene problems if not properly treated. Off-gas cleaning systems extract and treat the hazardous emissions, and ensure that the smelter operation is in accordance with environmental and industrial hygiene regulations. To this end, it is paramount that a well-designed control structure be incorporated into the system. In this work a plantwide control design procedure is applied to an industrial nickel smelter furnace off-gas cleaning system. We first approach the problem by conducting a steady-state analysis based on a nonlinear model of the process, where the objective is to determine how to achieve safe, clean and economic operation in terms of energy consumption. Results reveal that a large amount of energy can be saved by controlling the temperature in the furnace freeboard at its upper bound (active constraint). For the same reason, the temperatures in the two louvers (active constraints) should be controlled at their respective upper bounds so to minimize air intake into the system. The selection of the "unconstrained" variable to be controlled is found by applying the self-optimizing control technique, and the results indicate that a small loss is acceptable when one of the manipulated variables is fixed at its nominal optimal operating point, a highly desirable choice from an operational viewpoint. The bottleneck of the system is identified as the fans' discharge pressures when we allow the feed rate as a degree of freedom. Furthermore, a design change consisting of the installation of an auxiliary air intake in the smelter furnace shows to be a very effective economic alternative to minimize energy consumption. A control structure is then designed where the issue is to keep pressures in the system well within the negative region by determining the configuration of the regulatory and supervisory control layers such that acceptable dynamic performance in face of known, deterministic disturbance is achieved. Nonlinear dynamic simulations are performed to validate the suggested control structure for both modes of operation in the original system and in the proposed design change. The results showed that both regulatory and supervisory designs should make use of the simplicity of decentralized PI control schemes associated with some cascaded configurations so as to boost the disturbance rejection capabilities of the system.

1. Introduction

In industrial smelting operations, mineral concentrates, usually transported from mineral processing plants, are smelted through a series of reactions to reduce a metal oxide as well as to remove some impurity metals. The smelters provide the key operations in obtaining metal products from mineral concentrates. However, a by-product of the process is the hazardous emission of off-gases from these units which constitute a major source of atmospheric and plant environment pollutions. This gas is basically ladened with significant concentrations of CO, CO_2, and small amounts of SO_2 as well as particles of fine material. Continued effort on process control and optimization is thus necessary to further improve the operations of smelter off-gas handling systems in order to avoid emission of these gases into the work environment while satisfying tight environmental gas emission requirements.

The importance of smelter off-gas systems dealing with hazardous emissions has been well recognized and emphasized in some industrial conference presentations, e.g., Marcuson [1] and Ciccone and Storbeck [2], as well as in articles published in highly prestigious journals (Norgate et al. [3], Moors et al. [4] and Hilson [5]). In the past decades, active research has been carried out on

* Corresponding author.
E-mail address: antonio@deq.ufcg.edu.br (A.C.B. de Araujo).

0959-6526/$ – see front matter © 2009 Elsevier Ltd. All rights reserved.
doi:10.1016/j.jclepro.2009.05.014

Nomenclature

α_{fan}	Constant determined by the fan's characteristics, Pa/rpm^2
ϵ	Fan efficiency
$\Omega(0)$	Steady-state RGA matrix
ρ	Gas density, kg/m^3
τ_o	First-order actuator dynamics time constant, s
τ_w	First-order time constant of the dynamic relation, s
a	Cross-sectional area of the connecting pipes, m
A_{fleak}	Effective in-leakage area in the furnace, m^2
A_{lvleak}	Effective in-leakage area in the louvers, m^2
C_d	In-leakage coefficient
C_p	Heat capacity, m^3 Pa/K
C_q	Constant that adjusts the dimension of the units
H_{rf}	Enthalpy of the furnace reaction, m^3 Pa/kg
J	Cost function, \$/s
J'	Modified cost function, Pa kg/s
K	Coefficient that accounts for the compressibility of the gas, 1/Pa
k_c	Coefficient of momentum loss due to friction for the pipe connecting furnace and cyclone, N/(m^3/s)^2
k_{cot}	Coefficient of momentum loss due to friction for the pipe connecting fan and Cottrell, N/(m^3/s)^2
k_{fan}	Coefficient of momentum loss due to friction for the pipe connecting louver and fan, N/(m^3/s)^2
k_{lv}	Coefficient of momentum loss due to friction for the pipe connecting cyclone and louver, N/(m^3/s)^2
L_c	Length of the pipe connecting furnace and cyclone, m
L_{fan}	Length of the pipe connecting louver and fan, m
L_{lv}	Length of the pipe connecting cyclone and louver, m
N_{fan1}	Fan #1 rotation speed, rpm
N_{fan2}	Fan #2 rotation speed, rpm
O_1	Louver #1 vane opening
O_{1ss}	Steady-state value for the louver #1 vane opening
O_2	Louver #2 vane opening
O_{2ss}	Steady-state value for the louver #2 vane opening
O_{fs}	Louver furnace vane opening
$O_{fs,\ \text{backoff}}$	Back off in O_{fs}
$O_{fs,\ \max}$	Maximum value for O_{fs}
$O_{fs,\ sp}$	Set point for O_{fs}
p	Price of electricity, \$/kW
P_{atm}	Atmospheric pressure, Pa
P_{c1}	Cyclone #1 pressure, Pa
P_{c2}	Cyclone #2 pressure, Pa
$P_{f,\ sp}$	Set point for P_f, Pa
P_f	Furnace freeboard pressure, Pa
p_f	Price of the feed, \$/s
P_{fan1}	Fan #1 outlet pressure, Pa
P_{fan2}	Fan #2 outlet pressure, Pa
P_{iCt}	Cottrell inlet pressure, Pa
P_{iCt}	Cottrell inlet pressure, Pa
P_{lv1}	Louver #1 pressure, Pa
P_{lv2}	Louver #2 pressure, Pa
R	Gas constant, m^3 Pa/(K mole)
t	time, s
T_0	Room temperature, K
T_{c1}	Cyclone #1 temperature, K
T_{c2}	Cyclone #2 temperature, K
T_{co}	Equivalent CO temperature in the furnace, K
T_{conv}	Converter outlet temperature, K
T_f	Furnace freeboard temperature, K
T_{iCt}	Cottrell inlet temperature, K
T_{lv1}	Louver #1 temperature, K
T_{lv2}	Louver #2 temperature, K
V_c	Cyclone volume, m^3
V_f	Furnace volume, m^3
V_{fan}	Volume of the pipe connecting fan and Cottrell inlet, m^3
V_{lv}	Louver volume, m^3
W_{c1}	Cyclone #1 outlet flow rate, kg/s
W_{c2}	Cyclone #2 outlet flow rate, kg/s
W_{co}	Equivalent CO flow rate from the furnace, kg/s
$W_{\text{coke},\ \max}$	Maximum throughput rate to the furnace, kg/s
W_{coke}	Coke added to the furnace, kg/s
W_{conv}	Flow rate from the converters, kg/s
W_f	Total flow of gas from the furnace, $W_f = W_{f1} + W_{f2}$, kg/s
W_{f1}	Matte gas flow rate, kg/s
W_{f2}	Slag gas flow rate, kg/s
W_{fair}	Flow of air to the furnace, kg/s
W_{fan1}	Fan #1 outlet flow rate, kg/s
W_{fan1}	Fan #1 outlet flow rate, kg/s
W_{fan2}	Fan #2 outlet flow rate, kg/s
W_{fan2}	Fan #2 outlet flow rate, kg/s
W_{lvair1}	Air intake to louver #1, kg/s
W_{lvair2}	Air intake to louver #2, kg/s
X_{c1}	Cyclone #1 CO_2 concentration, kg/kg
X_{c2}	Cyclone #2 CO_2 concentration, kg/kg
X_f	CO_2 concentration in the furnace, kg/kg
X_{fan1}	Fan #1 outlet CO_2 concentration, kg/kg
X_{fan2}	Fan #2 outlet CO_2 concentration, kg/kg
X_{lv1}	Louver #1 CO_2 concentration, kg/kg
X_{lv2}	Louver #2 CO_2 concentration, kg/kg

developing mathematical models for a variety of smelter operations, but academic studies on modeling smelter off-gas cleaning systems have been limited (Bekker [6], Bekker et al. [7] and Kirschen et al. [8]). Few experimental efforts have been made, however, in parts of the off-gas circuit, particularly in the SO_2 and CO abatement (Pei-Shi et al. [9] and the patent by Wilson et al. [10]). With the growing emphasis on environmental impacts of industrial operations and the continuous need for reduction of energy requirements, extensive studies on different aspects of the smelter off-gas systems are needed for enhanced process understanding, improved off-gas system control and potential process optimization. Although research has been carried out in optimization of some off-gas systems (Woodward et al. [11]), no report has been found in optimal operation and control structure design of smelter off-gas cleaning processes.

In this work, the important decision of which variables to control in an industrial furnace smelter off-gas system, which is part of the Xstrata Nickel's Sudbury Smelter process, is addressed, and the issue is to ensure the operational objectives are achieved at the lowest possible cost while at the same time avoiding atmospheric emissions of hazardous gases. In addition, a throughput analysis is carried out to determine where in the process the bottleneck is located, and hence where production rate should be set. These decisions subsidize the design control process, both at the regulatory and supervisory layers. All these decisions represent the novelty generated by the present paper in the field of cleaner production since an optimally controlled off-gas cleaning system is prone to completely prevent hazardous emissions from leaking to the environment, at the same time that it reduces the energy usage to achieve so.

The remainder of the paper is organized as follows: a process description is presented to introduce the components of an industrial smelter furnace off-gas system; a steady-state analysis is carried out to select the variables to be controlled and define the bottleneck location of the plant; and control configuration designs are determined such that superior dynamic performance is achieved. The paper finishes with some concluding remarks. In addition, a model of the process developed by Shang et al. [12] is reproduced in the Appendix.

2. Process description

The operations of Xstrata Nickel's Sudbury Smelter cleaning system are described in some literatures (e.g., Stubina et al. [13] and Mckague and Norman [14]). A schematic of the process is given in Fig. 1.

Hot calcines from other parts of the process, together with dusts from the off-gas cyclones and Cottrell plant are fed to the furnace in addition to coke as a reduction agent and air. Each furnace is equipped with electrodes to provide the heat required for the complex reactions (Celmer et al. [15]), of which the most important involve the generation of CO, as given below.

$$Fe_2O_3 + C \rightarrow 2FeO + CO \tag{1}$$

$$Fe_3O_4 + C \rightarrow 3FeO + CO \tag{2}$$

$$FeO + C \rightarrow Fe + CO \tag{3}$$

CO usually reacts with O_2 producing CO_2. Moreover, a small amount of SO_2 can also be generated, mainly from the decomposition of sulphates, as given by the following chemical reaction.

$$FeSO_4 \rightarrow FeO + SO_2 + \frac{1}{2}O_2 \tag{4}$$

Therefore, the off-gas in the freeboard is mainly composed of CO, CO_2, SO_2, N_2 and O_2.

The off-gas generated in the furnace freeboard is removed through the ducts in the furnace ceiling and treated in two separate lines before a Cottrell plant, which is essentially an electro-static precipitator (ESP) for removing the fine particles from the gas. The off-gas first enters a cyclone to remove fine calcine particles, which is recycled back to the furnace. The cleaned off-gas passes a louvre for air cooling and then through a fan that discharges the cooled gas into a flue connected to the Cottrell plant. The fans in the gas system are essential in maintaining a slightly negative pressure and suitable gas temperature in the furnace freeboards.

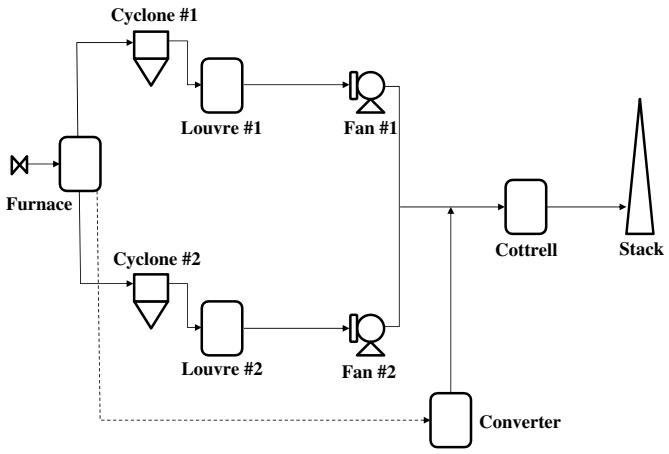

Fig. 1. Schematic diagram of an industrial smelter furnace off-gas system.

Converters post-process the electric furnace product to remove the remainder of the iron as a slag by-product. The operation of the converters is batch-wise where air is introduced to provide O_2 for the following reactions.

$$2Fe_{matte} + O_2 \rightarrow 2FeO_{slag} \tag{5}$$

$$FeS_{matte} + \frac{3}{2}O_2 \rightarrow FeO_{slag} + SO_2 \tag{6}$$

The converting operation continues until 2% of Fe is left in the final product. The converter off-gas is transferred to the Cottrell together with the off-gases from the furnace, and after dust removal in the Cottrell, the gases exit from the stack to the atmosphere.

The entire model derivation of the process described above, as well as the assumptions made and some open loop simulations can be found in Shang et al. [12]. In the Appendix of this paper, we reproduce the model equations for the sake of completeness and to serve as a reference to the reader. However, the cyclic process involving the converter is not considered in this paper.

3. Steady-state analysis of an industrial smelter furnace off-gas system

We here describe the application of a plantwide control design procedure to the industrial smelter furnace off-gas system. The procedure is outlined in Table 1, while a thorough description of the method is given by Skogestad [16]. The reason for choosing this approach is that the majority of the methods available in the literature to the design of control structures for industrial plants are based on heuristic arguments and do not provide a systematic basis for a rational decision [17]. Moreover, recent publications have showed the effectiveness of the method when applied to important test-bed problems [18–21].

In this section, we focus on steps 1–4 of the aforementioned table, starting with the degree of freedom analysis. It is worth to emphasize that, at this stage of the procedure, a nonlinear steady-state model of the process is the main requirement, and that the analysis is based on static considerations only.

3.1. Definition of optimal operation

The objective is to use as little power as possible in the two fans, subject to avoiding gas out-leakage. This is equivalent to minimizing the air in-leakage in the furnace while still preventing off-gas from finding a way out of the system. Therefore, the useful power consumption of a fan (Jorgensen [22]) given in (7) is the cost function (J) to be minimized:

$$J = \frac{pK}{\epsilon\rho C_q}\left[(P_{fan1} - P_{lv1})W_{fan1} + (P_{fan2} - P_{lv2})W_{fan2}\right] \tag{7}$$

where p is the price of electricity; K is a coefficient that accounts for the compressibility of the gas, assumed constant for the range of pressures considered in this work; ϵ is the fan efficiency, assumed the same for all fans; ρ is the gas density, assumed constant for the range of pressures considered in this work; C_q is a constant that adjusts the dimension of the units used; P_{fan1} and P_{fan2} are fans #1 and #2 discharge pressures; and P_{lv1} and P_{lv2} are louvers #1 and #2 discharge pressures.

By factoring out the constant terms in (7), we define the cost function to be minimized as in (8).

Table 1
Plantwide control structure design procedure after Skogestad [16].

(I) Top-down analysis

1. Definition of operational objectives:
   Identify operational constraints, and preferably identify a scalar cost function J to be minimized.

2. Manipulated variables u and degrees of freedom:
   Identify dynamic and steady-state degrees of freedom (DOF).

3. Primary controlled variables:
   Which (primary) variables $y_1 = c$ should we control?
   - Control active constraints.
   - Remaining DOFs: control variables for which constant set points give small (economic) loss when disturbances occur (self-optimizing control).

4. Production rate:
   Where should the production rate be set? This is a very important choice as it determines the structure of remaining inventory control system.

(II) Bottom-up design (with given primary controlled c and manipulated u variables)

5. Regulatory control layer:
   Purpose: "Stabilize" the plant using low-complexity controllers (single-loop PID controllers) such that (a) the plant does not drift too far away from its nominal operating point and (b) the supervisory layer (or the operators) can handle the effect of disturbances on the primary outputs ($y_1 = c$).
   Main structural issue:
   - Selection of secondary controlled variables (measurements) y_2.
   - Pairing of these y_2 with manipulated variables u_2.

6. Supervisory control layer:
   Purpose: Keep (primary) controlled outputs $y_1 = c$ at optimal set points c_s, using as degrees of freedom (inputs) the set points $y_{2,\,sp}$ for the regulatory layer and any unused manipulated variables u_1.
   Main structural issue:
   - Decentralized (single-loop) control: (a) May use simple PI or PID controllers; (b) Structural issue: choose input-output pairing.
   - Multivariable control (usually with explicit handling of constraints (MPC)). Structural issue: Size of each multivariable application.

7. Optimization layer:
   Purpose: Identify active constraints and compute optimal set points c_s for controlled variables.
   Main structural issue: Do we need real-time optimization (RTO)?

8. Validation:
   Nonlinear dynamic simulation of the plant.

$$J' = \frac{\epsilon\rho C_q}{pK}J = (P_{\text{fan1}} - P_{lv1})W_{\text{fan1}} + (P_{\text{fan2}} - P_{lv2})W_{\text{fan2}} \tag{8}$$

The constraints to which the process is subjected to are given below.

Furnace freeboard pressure [Pa]

$$P_f < -25 \tag{9}$$

Cyclone #1 and #2 pressures [Pa]

$$P_{c1} < 0 \text{ and } P_{c2} < 0 \tag{10}$$

Louver #1 and #2 pressures [Pa]

$$P_{lv1} < 0 \text{ and } P_{lv2} < 0 \tag{11}$$

Fan #1 and #2 outlet pressures [Pa]

$$P_{\text{fan1}} < 0 \text{ and } P_{\text{fan2}} < 0 \tag{12}$$

Cottrell inlet pressure [Pa]

$$P_{iCt} < 0 \tag{13}$$

Furnace freeboard temperature [K]

$$T_f < 923.15 \tag{14}$$

Louver #1 and #2 temperatures [K]

$$T_{lv1} < 643.15 \text{ and } T_{lv2} < 643.15 \tag{15}$$

Cottrell inlet temperature [K]

$$T_{iCt} < 643.15 \tag{16}$$

Louver #1 and #2 vane openings [–]

$$0 < O_1 < 1 \text{ and } 0 < O_2 < 1 \tag{17}$$

Fan #1 and #2 rotation speeds [rpm]

$$N_{\text{fan1}} < 1500 \text{ and } N_{\text{fan2}} < 1500 \tag{18}$$

In essence, these constraints reflect environmental demands by requiring negative pressure in the entire process circuit in order to prevent out-leakage of hazardous off-gases, and equipment protection, e.g., by keeping temperatures constrained to avoid damage. The constraints on the louver vane position and fan speed indicate the maximum allowable movement of these manipulated variables.

3.2. Manipulated variables and degree of freedom analysis

The process has 5 manipulated variables, namely, coke added to the furnace [kg/s], W_{coke}; louver #1 and #2 vane openings [%], O_1 and O_2; and fan #1 and #2 rotation speeds [rpm], N_{fan1} and N_{fan2}. These 5 manipulated variables correspond to 5 dynamic degrees of freedom, and at steady state there are equivalently 5 degrees of freedom because there are no variables that need to be controlled which would have no steady-state effect. We also consider 16 candidate measurements (see, e.g., first two columns of Table 2) which involve basically easily available measurements. With 5 degrees of freedom and 16 candidate measurements, there are $\binom{16}{5} = \frac{16!}{5!11!} = 4368$ possible choices of controlled variables. Even if one considers that coke added to the furnace (W_{coke}) is not an available manipulated variable, the number $\binom{16}{4} = \frac{16!}{4!12!} = 364$ is still very large. Clearly, an analysis of all of them is rather intractable, and to avoid this combinatorial explosion we first determine the active constraints that should be controlled to achieve optimal operation. This will substantially reduce the numbers of possibilities.

In addition, we consider there are 11 disturbances affecting the process (see bottom of the tables wherever disturbances are quoted) which include the effects of feed flow rate on the process and changes in the system's structure as represented by the effective in-leakage area in the furnace.

3.3. Primary controlled variable selection

To achieve optimal operation, we first choose to control the active constraints (Maarleveld and Rijnsdorp [23]). The difficult issue is to decide which unconstrained variables to control, and for this we use the concept of self-optimizing control (Skogestad [17]). The starting point for the selection of primary (economic) variables is the optimization of the process for the various known, deterministic disturbances.

3.3.1. Optimization and active constraints

The model proposed by Shang et al. [12], and reproduced in the Appendix, is implemented in MatLab™ and optimizations are

Table 2
Effect of disturbances on optimal operation for selected variables.

Variable	Description	Unit	Nominal	D1†	D2	D3	D4	D5	D6	D7	D8	D9	D10	D11
J'	Cost function	Pa kg/s	6.39	14.68	3.50	8.06	4.91	3.41	8.87	6.39	6.39	4.32	4.86	8.42
P_f	Furnace freeboard pressure	Pa	−159.13	−229.14	−128.89	−176.84	−142.34	−159.13	−159.13	−159.13	−159.13	−70.72	−145.39	−174.90
T_f	Furnace freeboard temperature	K	923.15	923.15	923.15	923.15	923.15	923.15	923.15	923.15	923.15	923.15	923.15	923.15
P_{c1}	Cyclone #1 pressure	Pa	−337.43	−486.49	−273.33	−371.96	−304.58	−337.43	−337.58	−337.42	−337.42	−249.01	−310.53	−371.64
P_{lv1}	Louver #1 pressure	Pa	−448.87	−647.34	−363.60	−493.91	−405.98	−448.87	−449.11	−448.85	−448.86	−360.45	−413.73	−494.61
T_{lv1}	Louver #1 temperature	K	643.15	643.15	643.15	643.15	643.15	643.15	643.15	643.15	643.15	643.15	643.15	643.15
P_{c2}	Cyclone #2 pressure	Pa	−337.43	−486.49	−273.33	−371.96	−304.58	−337.43	−337.58	−337.42	−337.42	−249.01	−310.53	−371.64
P_{lv2}	Louver #2 pressure	Pa	−448.87	−647.34	−363.60	−493.91	−405.98	−448.87	−449.11	−448.85	−448.86	−360.45	−413.73	−494.61
T_{lv2}	Louver #2 temperature	K	643.15	643.15	643.15	643.15	643.15	643.15	643.15	643.15	643.15	643.15	643.15	643.15
T_{iCt}	Cottrell inlet temperature	K	485.48	487.73	484.33	486.00	484.95	483.55	488.29	578.23	392.73	485.48	484.69	486.40
P_{fan1}	Fan #1 outlet pressure	Pa	−176.31	−124.49	−197.90	−165.43	−186.61	−303.55	−70.54	−176.31	−176.31	−176.32	−191.45	−154.00
P_{fan2}	Fan #2 outlet pressure	Pa	−176.31	−124.49	−197.90	−165.43	−186.61	−303.55	−70.54	−176.31	−176.31	−176.32	−191.45	−154.00
P_{iCt}	Cottrell inlet pressure	Pa	−313.88	−323.05	−309.34	−315.98	−311.78	−441.12	−208.23	−313.88	−313.88	−313.88	−310.76	−317.56
O_1	Louver #1 vane opening	–	0.199	0.199	0.199	0.198	0.199	0.199	0.199	0.199	0.199	0.222	0.184	0.216
O_2	Louver #2 vane opening	–	0.199	0.199	0.199	0.198	0.199	0.199	0.199	0.199	0.199	0.222	0.184	0.216
N_{fan1}	Fan #1 rotation speed	rpm	522.08	723.09	407.06	573.13	468.37	381.21	615.28	522.06	522.06	429.10	471.47	583.62
N_{fan2}	Fan #2 rotation speed	rpm	522.08	723.09	407.06	573.13	468.37	381.21	615.28	522.06	522.06	429.10	471.47	583.62

†	Disturbance description	Nominal	Disturbance (Δ)
D1	Coke added to the furnace, W_{coke} [kg/s]	2	+0.4 (+20%)
D2	Coke added to the furnace, W_{coke} [kg/s]	2	−0.2 (−10%)
D3	Equivalent CO temperature in the furnace, T_{co} [K]	1573.15	+200
D4	Equivalent CO temperature in the furnace, T_{co} [K]	1573.15	−200
D5	Flow rate from converters, W_{conv} [kg/s]	300	+60 (+20%)
D6	Flow rate from converters, W_{conv} [kg/s]	300	−60 (−20%)
D7	Converter outlet temperature, T_{conv} [K]	473.15	+100
D8	Converter outlet temperature, T_{conv} [K]	473.15	−100
D9	Effective in-leakage area in the furnace, A_{fleak} [m^2]	1.50	+0.75 (+50%)
D10	Room temperature, T_0 [K]	273	−30
D11	Room temperature, T_0 [K]	273	+30

performed for each condition imposed by the selected disturbances. In this section we assume that the coke added to the furnace (W_{coke}) is fixed, whereas in the next section we discuss the case when it is treated as a degrees of freedom (throughput analysis).

The results of the optimization runs can be seen in Table 2, which gives the values of the candidate controlled variables for the nominal case and for the 11 disturbance scenarios, and in Fig. 2, which shows the effect of the disturbances on the cost. It can be seen that 3 constraints are always active, namely, T_f (upper bound), T_{lv1} (upper bound), and T_{lv2} (upper bound). This was somehow expected since power requirements are minimized when the net head across a fan is small, which may correspond to maximizing the pressure/temperature at the farthermost location upstream the fan. In addition, power consumption in the fans is also reduced by minimizing the amount of air taken into the system which explains why the temperatures of the louvers are at their respective upper bounds. As these 3 active constraints must be implemented to ensure optimal operation (Marleveld and Rijnsdorp [23]), we are left with 1 degree of freedom. In the next subsection, we will use the concept of self-optimizing control to try to find a suitable controlled variable that when kept at its nominal optimum set point leads to (near) optimal operation without the need to re-optimize the process in the face of disturbances.

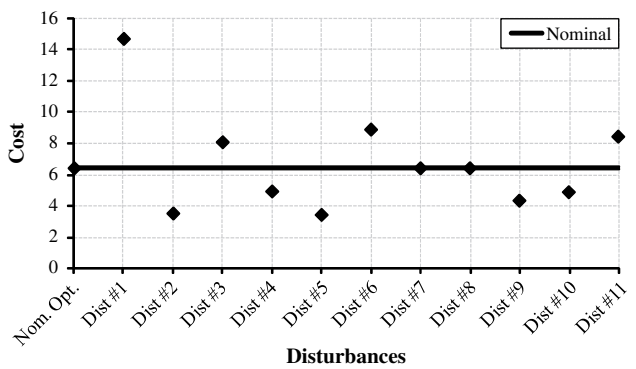

Fig. 2. Effect of disturbances on optimal operation.

It can be readily pointed out from Fig. 2 that the disturbances which have the largest influence on the cost are those that affect the mass balance, i.e., D1 and D2, in a much higher degree than D5 and D6. Note that by increasing the flow rate from the converters the cost is reduced, and vice-versa. This is due to the reduction in the head from the louver to the fan, i.e., the difference $P_{fan} - P_{lv}$ decreases because the Cottrell inlet pressure (P_{iCt}) is reduced since its inlet flow increases. When the equivalent CO temperature in the furnace (T_{co}) increases (disturbance D3), pressure in the furnace freeboard is reduced in order to allow more air into the system to cool down the off-gas which in turns increases the flow of gas throughout the circuit, increasing power demand on the fans. The converter temperature (disturbances D7 and D8) has no economical effect on the system for the obvious reason that it has no influence in the upstream units, particularly the fans. The optimization results for disturbance D9 show that it is "cheaper" to operate the furnace at higher pressures typically at a determined safety limit, which for the kind of furnace considered in this paper, is accomplished by allowing more air into the furnace. The effect is that the pressure upstream to the fans increases with consequent reduction in power requirements. Having said that, it sounds reasonable to speculate about changing the plant design by installing a secondary air intake device in the furnace freeboard. This will be discussed in more details in a coming section. The seasonal change in temperature (low frequency disturbances D10

and D11) affects the economics of the system by allowing more or less cooling load depending upon the room temperature.

3.3.2. Unconstrained degree of freedom selection

As mentioned previously, with 1 degree of freedom left, we need to find a suitable controlled variable that when kept at its nominal optimum set point leads to near-optimal operation for the assumed disturbances considered. We will use the self-optimizing control technology to this end. It basically consists on finding a set of variables that when kept at their nominal optimal setpoints minimize the loss (L) defined in (19), where $J(c, d)$ is the actual value of the cost function obtained with a specific choice of controlled variable c for a given disturbance d, and $J_{\text{opt}}(d)$ is the truly optimal value of the cost function if the process was re-optimized for each d.

$$L = J(c, d) - J_{\text{opt}}(d) \tag{19}$$

By keeping each candidate controlled variable constant at its nominal optimum, with the constraint variables (T_f, T_{lv1}, and T_{lv2}) controlled, we found that the smallest average losses over the entire range of disturbances are calculated for either N_{fan1} or N_{fan2}. From an operational point of view, this is very attractive since it is always a good practice to operate with minimal manipulation handling. The other two candidate variables which gave feasible operation when kept fixed were P_{lv1} and P_{lv1}. Note that, in this paper, we consider an economic loss as acceptable when it is less than 10% of the nominal cost in Table 2. We then select one of the fan rotation speeds as the unconstrained (self-optimizing) variable.

3.4. Production rate

The decision on where in the process production rate should be set is closely related to the location of bottlenecks that limit the flows of mass and/or energy. We therefore distinguish between two modes of operation:

- *Mode I: Given feed rate*. The optimal operation for this mode was described in the previous section by fixing the rate coke is fed to the furnace.
- *Mode II: Maximum throughput*. Here, we determine the evolution of the static behavior of the system as we increase the feed rate (W_{coke}) to the process. With given prices for the final product, it is optimal, from an economic point of view, to increase the production rate as much as possible because the prices may be such that the actual profit of the enterprise would increase (almost linearly) with W_{coke}. However, as discussed in detail below, other process constraints result in bottlenecks that prevent this increase above a certain maximum.

To find the maximum throughput (Mode II), and hence the bottleneck of the process, we use the available feed rate of coke to the furnace W_{coke} as a degree of freedom and re-optimize the process, using the profit function J' as given in (20), where p_f is the price of the feed.

$$J' = \frac{pK}{\epsilon\rho C_q}\left[(P_{\text{fan1}} - P_{lv1})W_{\text{fan1}} + (P_{\text{fan2}} - P_{lv2})W_{\text{fan2}}\right] - p_f W_{\text{coke}} \tag{20}$$

Operation becomes infeasible when $W_{\text{coke}} = 3.15$ kg/s since both fan discharge pressures become active at their respective upper bounds; consequently, production cannot be further increased, and the bottleneck of the process is either P_{fan1} or P_{fan2}. Thus, production rate should set at one of these locations with $P_{\text{fan1}} = 0$ Pa or $P_{\text{fan2}} = 0$ Pa, i.e., either one of the two discharge pressures variable should "control" the plant throughput. This is indeed an ideal situation since in practice the two lines are not exactly the same, and only one of the fan discharge pressures will indeed limit an increase in the throughput. An important remark is that none of the manipulated variables did reach their upper bounds. It is worth mentioning that the active constraints on each optimization run were found to be the same as per Mode I, i.e., T_f, T_{lv1}, and T_{lv2} are active at their respective upper bounds.

When disturbances are considered the maximum throughput $W_{\text{coke, max}}$ will change accordingly. Assuming the plant is subject to disturbances D3 to D11 (see, e.g., bottom of Table 2), we found that the converters largely affect the steady-state economic operation of the off-gas system (disturbances D5 and D6). For these disturbances, the throughput varies significantly, from $W_{\text{coke}} = 2.52$ to $W_{\text{coke}} = 3.78$ kg/s.

3.5. Design change to improve economics

As mentioned in Section 3.3.1, an attractive design change would be to include a controlled air intake device in the furnace in order to improve the economics of the process. This is investigated in more detail in this section, and we consider the same approach used in the previous sections.

The degrees of freedom of the process are augmented by including the cooling air added to the furnace as the new manipulated variable, which is expressed in terms of a vane position O_{fs}. We assume the same cost function as given by (8) subject to the same set of constraints augmented by one more, namely, $0 < O_{fs} < 1$. Finally, the disturbances are the same as given at the bottom of Table 2.

The optimization of the modified process for the various disturbances (Mode I of operation) is shown in Table 3 and Fig. 3. It becomes evident that the proposed design change brings a significant economic improvement vis-*à*-vis the original plant: the nominal operational cost with the air intake device installed in the furnace is reduced by about 50%. Moreover, the same variables found to be active for the original plant are also active in the proposed new design, namely, T_f (upper bound), T_{lv1} (upper bound), and T_{lv2} (upper bound). In addition, the furnace pressure, P_f, is also active at its upper bound. Again, this leaves 1 unconstrained degree of freedom, and by applying the self-optimizing control approach we found that acceptable loss along with "comfortable" operation occurs when one of the two fan speeds (N_{fan1} or N_{fan2}) is selected as the sole unconstrained variable.

Another advantage of changing the plant design is a reduction on the operating cost as we allow the feed rate (W_{coke}) to vary (maximum throughput analysis). Although the maximum throughput is reached at the same point as per the original plant, i.e., at $W_{\text{coke}} = 3.15$ kg/s, the cost reduction at bottleneck operation, with P_{fan1} and/or P_{fan2} active, is about 37%. However, the active constraints of the proposed new design at the maximum throughput are not the same as per Mode I. The new manipulation, O_{fs}, becomes active at $W_{\text{coke}} = 2.91$ kg/s, and from this point on P_f is no longer active. Finally, at the maximum throughput, the active constraints are T_f, T_{lv1}, T_{lv2}, P_{fan1}, P_{fan2}, and O_{fs}.

When disturbances D3 to D11 are considered, the maximum throughput changes as per the original configuration where again disturbances D5 and D6 cause the largest variations. Moreover, the set of active constraints at maximum throughput is not the same for all disturbances, switching from the O_{fs} to P_f in disturbances D6 and D9. This might have underlying implications when designing a control structure for this process due to the possible need of "complex", multivariable controllers. One alternative would be to find a "back-off" for O_{fs} such that $O_{fs,\ sp} = O_{fs,\ \max} - O_{fs,\ \text{backoff}}$. This

Table 3
Effect of disturbances on optimal operation for selected variables for the proposed design change.

Variable	Description	Unit	Nominal	D1†	D2	D3	D4	D5	D6	D7	D8	D9	D10	D11
J'	Cost function	Pa kg/s	3.25	8.93	1.30	4.33	2.28	0.26	5.73	3.25	3.25	3.25	2.23	4.62
P_f	Furnace freeboard pressure	Pa	−25.00	−25.00	−25.00	−25.00	−25.00	−25.00	−25.00	−25.00	−25.00	−25.00	−25.00	−25.00
T_f	Furnace freeboard temperature	K	923	923	923	923	923	923	923	923	923	923	923	923
P_{c1}	Cyclone #1 pressure	Pa	−203.30	−281.76	−169.43	−220.12	−187.25	−203.30	−203.30	−203.30	−203.30	−203.30	−190.18	−218.28
P_{lv1}	Louver #1 pressure	Pa	−314.74	−442.23	−259.69	−342.07	−288.65	−314.74	−314.74	−314.74	−314.74	−314.74	−293.42	−339.07
T_{lv1}	Louver #1 temperature	K	643	643	643	643	643	643	643	643	643	643	643	643
P_{c2}	Cyclone #2 pressure	Pa	−203.30	−281.76	−169.43	−220.12	−187.25	−203.30	−203.30	−203.30	−203.30	−203.30	−190.18	−218.28
P_{lv2}	Louver #2 pressure	Pa	−314.74	−442.23	−259.69	−342.07	−288.65	−314.74	−314.74	−314.74	−314.74	−314.74	−293.42	−339.07
T_{lv2}	Louver #2 temperature	K	643	643	643	643	643	643	643	643	643	643	643	643
T_{iCt}	Cottrell inlet temperature	K	485.48	487.73	484.33	486.00	484.95	483.55	488.29	578.23	392.73	485.48	484.69	486.40
P_{fan1}	Fan #1 outlet pressure	Pa	−176.31	−124.95	−197.91	−165.43	−186.60	−303.55	−70.66	−176.31	−176.31	−176.31	−191.42	−156.89
P_{fan2}	Fan #2 outlet pressure	Pa	−176.31	−124.95	−197.91	−165.43	−186.60	−303.55	−70.66	−176.31	−176.31	−176.31	−191.42	−156.89
P_{iCt}	Cottrell inlet pressure	Pa	−313.88	−323.05	−309.34	−315.98	−311.78	−441.12	−208.23	−313.88	−313.88	−313.88	−310.76	−317.56
O_1	Louver #1 vane opening	–	0.237	0.240	0.235	0.238	0.236	0.237	0.237	0.237	0.237	0.237	0.219	0.259
O_2	Louver #2 vane opening	–	0.237	0.240	0.235	0.238	0.236	0.237	0.237	0.237	0.237	0.237	0.219	0.259
N_{fan1}	Fan #1 rotation speed	rpm	372.07	563.28	248.57	420.27	319.46	105.80	494.05	372.07	372.07	372.07	319.37	426.83
N_{fan2}	Fan #2 rotation speed	rpm	372.07	563.28	248.57	420.27	319.46	105.80	494.05	372.07	372.07	372.07	319.37	426.83
O_{fs}	Louver furnace vane opening	–	0.571	0.760	0.477	0.622	0.520	0.571	0.571	0.571	0.571	0.384	0.529	0.617

†	Disturbance description	Nominal	Disturbance (Δ)
D1	Coke added to the furnace, W_{coke} [kg/s]	2	+0.4 (+20%)
D2	Coke added to the furnace, W_{coke} [kg/s]	2	−0.2 (−10%)
D3	Equivalent CO temperature in the furnace, T_{co} [K]	1573.15	+200
D4	Equivalent CO temperature in the furnace, T_{co} [K]	1573.15	−200
D5	Flow rate from converters, W_{conv} [kg/s]	300	+60 (+20%)
D6	Flow rate from converters, W_{conv} [kg/s]	300	−60 (−20%)
D7	Converter outlet temperature, T_{conv} [K]	473.15	+100
D8	Converter outlet temperature, T_{conv} [K]	473.15	−100
D9	Effective in-leakage area in the furnace, A_{fleak} [m^2]	1.50	+0.75 (+50%)
D10	Room temperature, T_0 [K]	273	−30
D11	Room temperature, T_0 [K]	273	+30

back-off corresponds to the minimal value of O_{fs} over the range of assumed disturbances, i.e., $O_{fs,\ sp} = 0.816$. We then have economic loss with respect to the maximum throughput computation. Nonetheless, this loss is very small, and a decentralized control structure can then be design.

4. Bottom-up design of an industrial smelter furnace off-gas system

We now switch to the design of the regulatory and supervisory control structures of the smelter furnace off-gas system using steps 5–8 described in Table 1. One of the main issues in the design of the regulatory control layer is to ensure "stable" and smooth operation. By "stable" we mean not only the mathematical stabilization of unstable modes (e.g., related to control of level loops), but also that the regulatory layer should prevent the plant from drifting too far away from its nominal optimum operating point, and that it should be designed such that the supervisory layer (or the operators) can handle the effect of disturbances on the primary outputs. We choose a decentralized supervisory control configuration since, for this process, the active constraints always remain constant despite the effect of known disturbances. The various control configurations of the smelter furnace off-gas system are then tested for performance by conducting dynamic simulations on the Matlab™ dynamic nonlinear model for some selected disturbances.

4.1. Structure of the regulatory control layer

The main objective of this layer is to provide sufficient control quality to enable a trained operator to keep the plant running safely without the need for using higher layers in the control system. In addition, the control task at this layer is to prevent the plant from drifting away from its desired operating point on the short time scale.

As the smelter furnace off-gas system has no unstable mathematical modes, no stabilization of this kind is indeed necessary. However, from an operator's point of view, "stable" operation is not always related to instability in a mathematical sense but rather to "smooth" operation of the plant where drift of variables is minimized. As pressure dynamics are generally very fast, drift in these variables due to disturbances is avoided by controlling pressure at selected locations in the plant. In Mode I, pressure in the furnace, P_f, is selected to be controlled using either fan speeds, N_{fan1} or N_{fan2}, this minimizes the impact of disturbances in the primary controlled temperatures because of the direct relation between these two variables. As for Mode II, and for the same reason, P_f is also controlled, and we use the feed to the furnace (W_{coke}) as

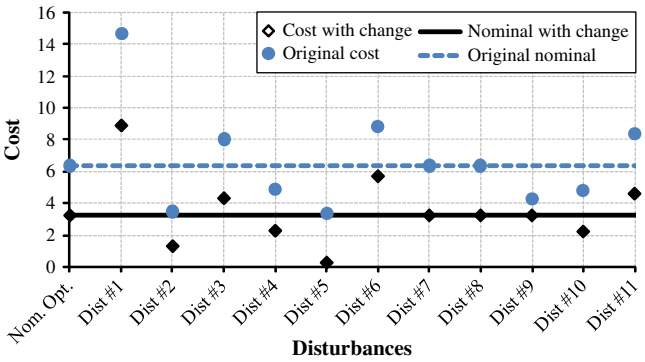

Fig. 3. Effect of disturbances on optimal operation for the proposed design change. Circles and the dashed line represent the cost of the original configuration as depicted in Fig. 2.

manipulated variable since it is available as a degree of freedom. We also control the two outlet pressures of the fans, P_{fan1} and P_{fan2}, and for this we use the fans' rotation speeds, i.e., N_{fan1} and N_{fan2}, respectively. Both configurations ensure fast "stabilization" of the system. Moreover, since for Mode II P_{fan1} and P_{fan2} are active constraints they need to be controlled.

4.2. Structure of the supervisory control layer

The intended aim of the supervisory control layer is to keep the active constraints and unconstrained (self-optimizing) controlled variables at their constant optimum setpoints.

For the unconstrained controlled variable in Mode I, we decide to keep the fan #1 speed (N_{fan1}) fixed at its nominal optimum set point. For Mode II, the furnace temperature, T_f is controlled using as manipulated variable the set point of the furnace pressure controller, $P_{f,\ sp}$. These two strategies favor optimal economic performance with minimal losses. Moreover, for both modes of operation, the temperatures in the louvres, T_{lv1} and T_{lv2}, are controlled using the two louvres vane openings, O_1 and O_2, respectively. The production rate manipulator is selected as the feed rate to the furnace, W_{coke}, where it is fixed in Mode I and adjusted to give the desired maximum throughput in Mode II.

The final configurations for both modes of operation are shown in Fig. 4. The selected loops are closed, and the resulting PI controllers tuned one at the time in a sequential manner (starting with the fastest loops), using the SIMC tuning rules described in Skogestad [24].

5. Validation of the proposed control structures

We here perform dynamic simulations to validate the proposed control structures for the smelter furnace off-gas system when facing fast changing disturbances. For this purpose, disturbances D1, D2, D5, and D6 listed at the bottom of Table 2 are considered. Simulations for both modes of operation showed that disturbances D3 and D4 have little effect on the open-loop behavior of the system, and that disturbances D7 and D8 do not dynamically affect the process since the converter outlet temperature does not influence upstream units. Moreover, for Mode II, only disturbances D5 and D6 are valid since W_{coke} is not an available degree of freedom.

As the sine qua non environmental requirement is that out-leakage of hazardous off-gas must be avoided by any means, pressures anywhere across the system must not become positive, that is, pressures are defined as hard constraints where the upper dynamic bounds are zero, this also applies to the furnace pressure (P_f) provided it remains within the negative bound of −25 at steady state. On the other hand, constraints on the primary controlled temperatures can be violated dynamically (soft constraints), as long as when steady state is reached they settle down to their optimum setpoints. Needless to say, the manipulated variables must always be dynamically constrained to the values defined in Section 3.1.

Fig. 5 illustrates the input and output responses of the system for Mode I using the proposed decentralized control configuration. They tell us the proposed control structure is effective in rejecting disturbances on the controlled variables, showing quick dynamic response with little deviation from set point. Moreover, and most important, pressures around the system remains strictly within bounds. As for Mode II, operation at maximum throughput with $P_{fan1} = P_{fan2} = 0$ Pa results in violation of pressure constraints on those variables. In order to circumvent this setback, since the overshoot seems to be unavoidable, we back off from the maximum throughput, where $W_{coke} = 3.15$ kg/s, to the point in which $P_{fan1} = P_{fan2} = -9$ Pa, and $W_{coke} = 3.10$ kg/s, corresponding to a very small loss, $\Delta W_{coke} = 0.05$ kg/s. The responses are shown in Fig. 6,

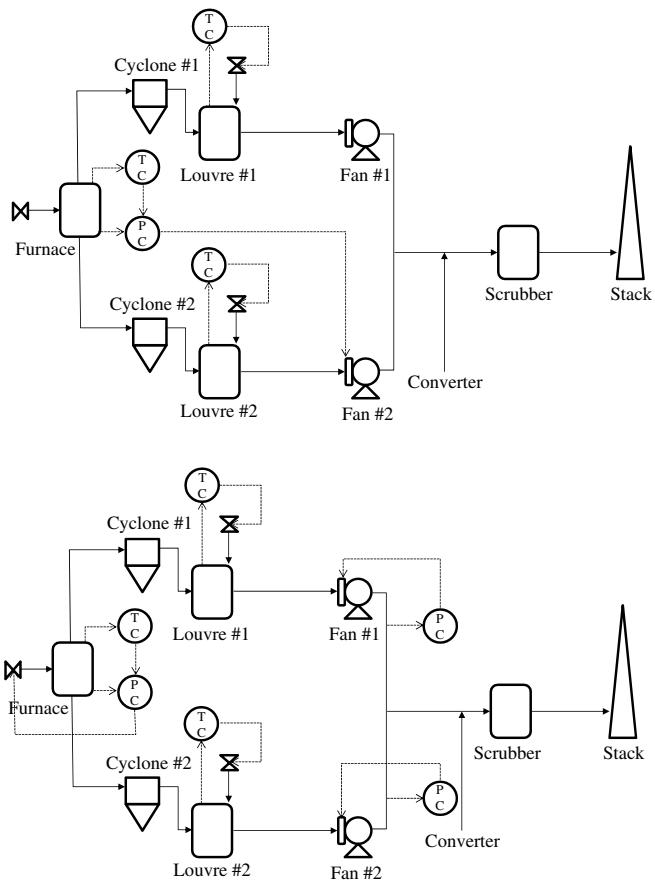

Fig. 4. Control configuration assuming conventional P/PI controllers for Mode I (upper figure) and Mode II (lower figure) of operation.

from where we can see the good dynamic performance with pressures well within their negative ranges.

5.1. Validation for the proposed design change

Along the same lines as per the original design, we control P_f, T_f, T_{lv1}, and T_{lv2} in Mode I. When operating in Mode II, we control P_f, T_f, T_{lv1}, T_{lv2}, P_{fan1}, and P_{fan2}. Moreover, in both cases these variables are all active constraints (except for P_f in Mode II), and need to be controlled. In addition, in Mode I we select N_{fan1} as the primary (unconstrained) controlled variable, and in Mode II, it is the secondary air to the furnace O_{fs} that is selected as the economic (unconstrained) controlled variable.

Although the pairing of inputs with outputs variables in Mode I can be decided somehow intuitively, we here base our decision on a more rigorous steady-state RGA analysis since it is not clear which manipulated variables should be paired with T_f and P_f. A linearized model of system, found by using the linearization tool available in Simulink™, reveals that $\Omega(0)$, the steady-state RGA matrix as given in (21), furnishes the pairings for Mode I of operation.

$$\Lambda(0) = \begin{bmatrix} \mathbf{0.8639} & -0.0014 & 0.0000 & 0.1375 & 0.0000 \\ -0.0001 & \mathbf{0.8719} & 0.0000 & 0.1282 & 0.0000 \\ 0.0000 & 0.0000 & \mathbf{1.0000} & 0.0000 & 0.0000 \\ 0.1306 & 0.1245 & 0.0000 & \mathbf{0.6666} & 0.0783 \\ 0.0056 & 0.0050 & 0.0000 & 0.0677 & \mathbf{0.9217} \end{bmatrix} \tag{21}$$

with $u = [O_1\ O_2\ N_{fan1}\ N_{fan2}\ O_{fs}]$ and $y = [T_{lv1}\ T_{lv2}\ N_{fan1}\ T_f\ P_f]$.

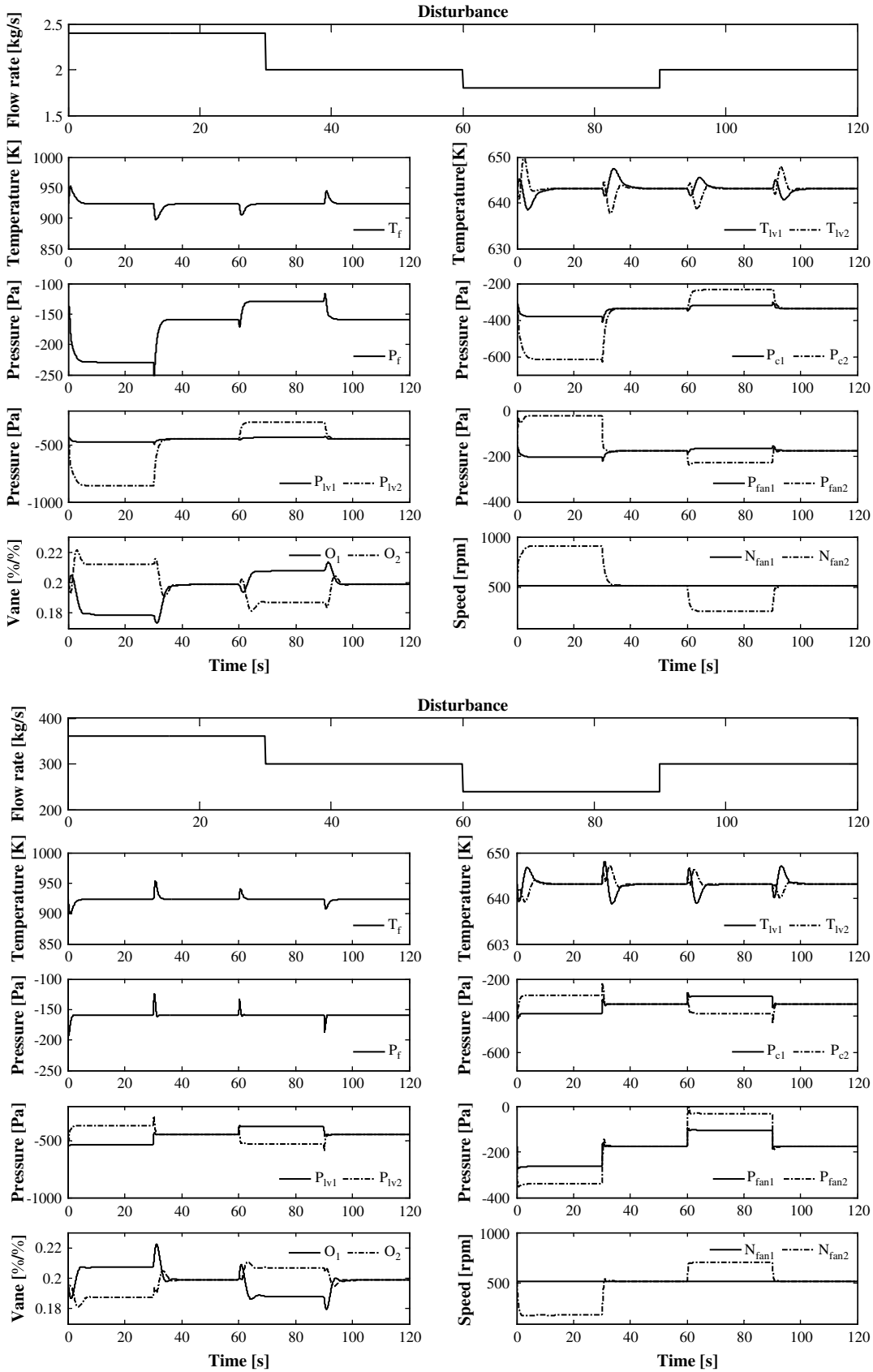

Fig. 5. Responses of selected variables in Mode I with conventional P/PI controllers for disturbances in W_{coke} (upper Figure) and W_{conv} (lower Figure).

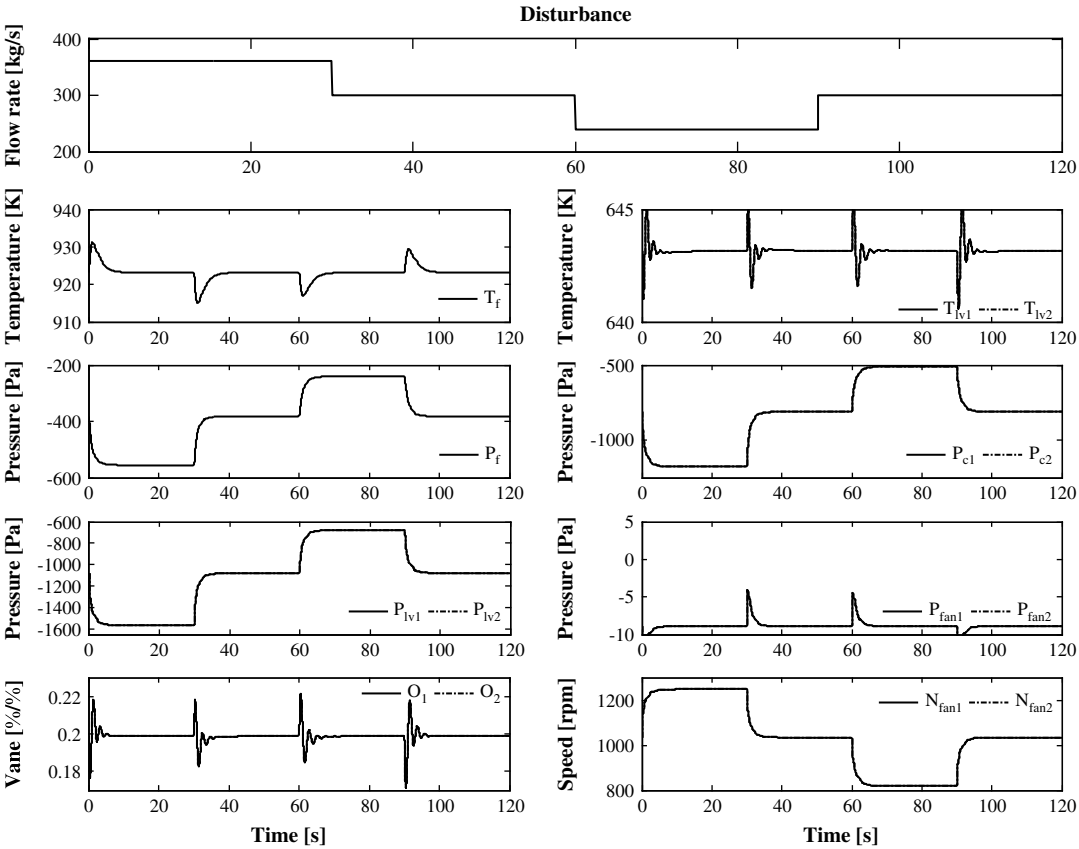

Fig. 6. Responses of selected variables for disturbances in W_{conv} (top of the Figure) in Mode II with conventional P/PI controllers and throughput back-off.

Assuming the same disturbance as per the original design, the responses for the simulations of Mode I of operation are shown in Fig. 7. It can be seen that the responses are fast and that pressures are constrained to their negative ranges.

Operation of the proposed design change in Mode II of operation when subjected to the same disturbances as per Mode II in the original design is infeasible due to the seemingly unavoidable peaks in P_{fan1} and P_{fan2} in the positive region. To avoid this, we again use a back-off strategy so as to reduce the pressures downstream the fans from $P_{fan1} = P_{fan2} = 0$ Pa to $P_{fan1} = P_{fan2} = -55$ Pa, corresponding to a decrease in nominal throughput from $W_{coke} = 3.15$ kg/s to $W_{coke} = 2.87$ kg/s. Fig. 8 depicts the responses of the backed off configuration which are fast and with pressures in the negative range.

6. Discussion

This paper discussed the application of a plantwide procedure to an industrial smelter furnace off-gas system. The discussion first focused on the steady-state analysis of a non-linear model of the process as given by Shang et al. [12], and the idea was to minimize the energy consumption of the plant for the different disturbances subject to the most important requirement of avoiding hazardous emissions to the atmosphere.

The optimization results as a function of the assumed disturbances showed that it is economically optimal to control the temperature around the furnace (active constraint) at its upper bound so as to ensure maximum pressure and reduced fan power consumption. Along the same line of energy saving, the temperatures in both louvers (also active constraints) should be controlled at their respective upper bounds in order to minimize the amount of air intake to cool down the off-gas. These variables should be controlled in both modes of operation, i.e., with fixed feed rate (Mode I) and with feed rate as a degree of freedom (Mode II). The sole unconstrained variable in Mode I, selected by applying the self-optimizing technique of Skogestad [16], was found to be one of the fans' rotation speed. This decision is also corroborated by the fact that it is a good practice to minimize the use of manipulated variables during operation. The bottleneck of the process, found in Mode II, was found as the pressure downstream the fans, and at the maximum throughput $P_{fan1} = P_{fan2} = 0$ Pa. However, this choice gives infeasible dynamic operation when the process is subject to disturbances since either P_{fan1} or P_{fan2} violate the most important requirement of avoiding positive pressure in the system. We then back off these variables so as to have $P_{fan1} = P_{fan2} = -9$ Pa. Validation of the proposed configurations was performed for important disturbances affecting the process in both modes of operation, where the values of these disturbances were taken as the maximum allowed variations that, although less likely to occur in practice, give the ultimate test for dynamic performance. The responses of both modes of operation to such perturbations were fast, with pressures within the negative region, as required to avoid out-leakage.

From the results of disturbance D9 as seen in Fig. 2, it was found that one economically attractive alternative to improve process economics would be to include an air intake in the furnace as an extra manipulated variable. The idea is to operate the furnace at the highest possible pressure (higher than in the original design) so as to consume less power in the fans, and hence reduce operational cost (see Fig. 3). The production rate calculations for this proposed modified design showed it is possible to operate at maximum throughput with a 37% cost reduction vis-*à*-vis the original design.

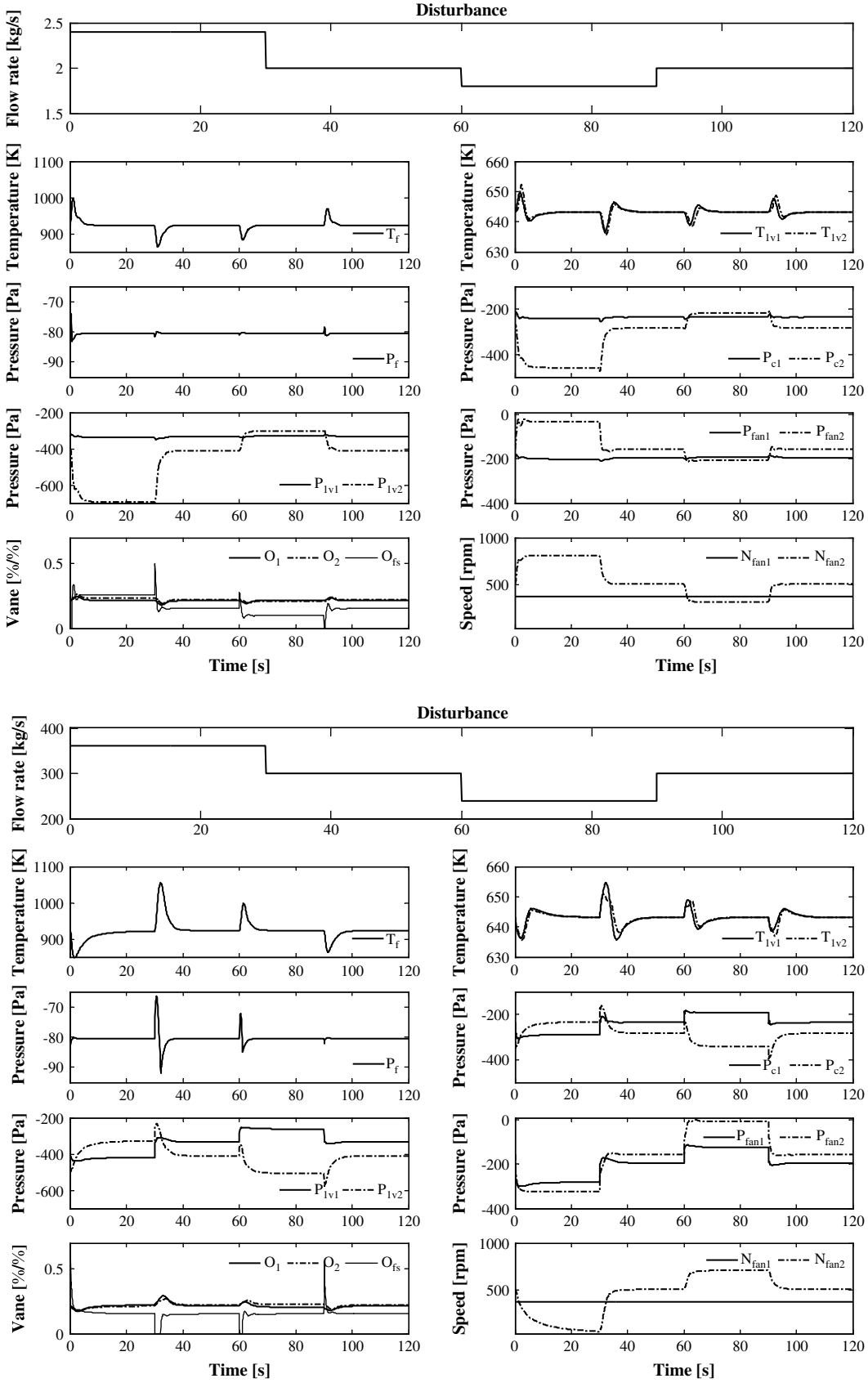

Fig. 7. Responses of selected variables in Mode I with design change for disturbances in W_{coke} (upper Figure) and W_{conv} (lower Figure).

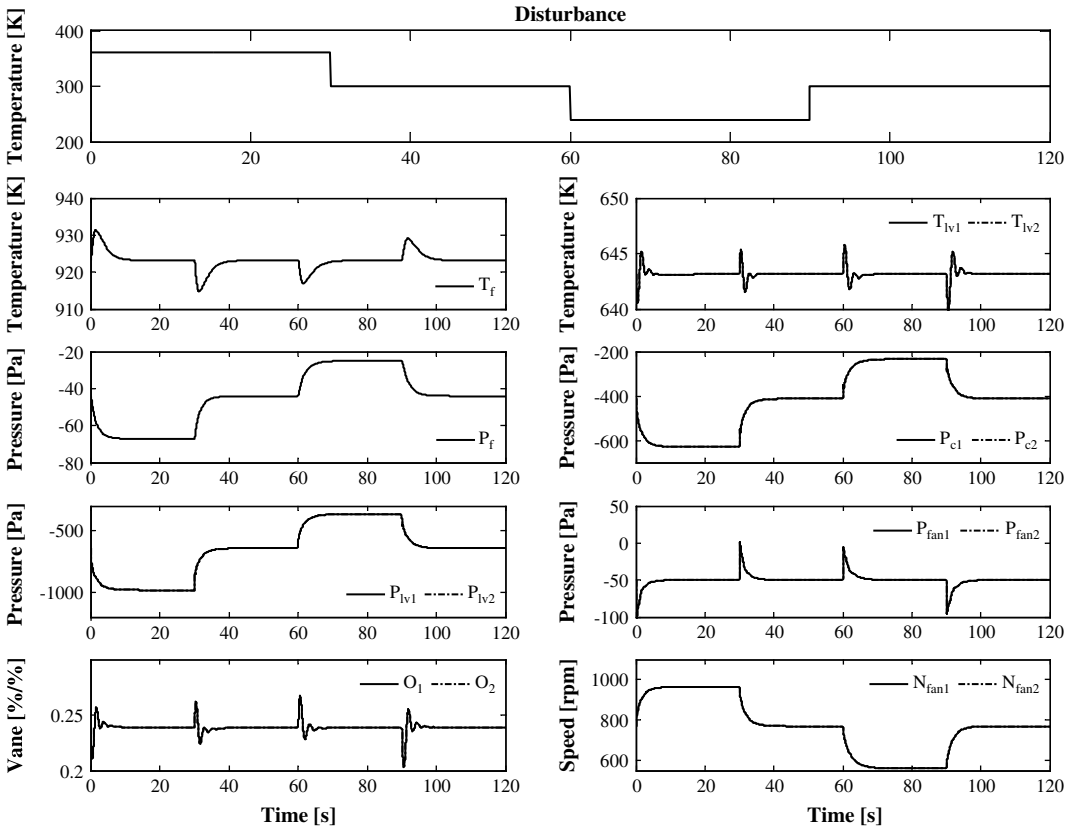

Fig. 8. Responses of selected variables for disturbances in W_{conv} (top of the Figure) in Mode II with design change and back-off strategy.

In addition, the bottleneck of the process was found to be either one of the two fan discharge pressures, with $P_{fan1} = P_{fan2} = 0$ Pa; nevertheless, dynamic responses showed these pressure constraints are easily violated, and to overcome this setback we backed off the optimal operation to have $P_{fan1} = P_{fan2} = -55$ Pa. The validation of the proposed configurations (Mode I and II) of the design change showed fast dynamic responses with pressures inside the negative range.

7. Conclusion

The use of a systematic procedure to the design of a simple decentralized control structure shows it is possible to operate an industrial smelter furnace off-gas cleaning system in a (near) optimal economic fashion that entirely complies with environmental regulations by avoiding out-leakage of hazardous off-gases to the atmosphere. The resulting dynamic performances for both modes of operation ratify the topnotch efficiency of the proposed control configurations when facing large, fast disturbances affecting the process.

Acknowledgment

The authors gratefully acknowledge the financial support provided by the Centre for Excellence in Mining Innovation (CEMI).

Appendix

We here reproduce the model equations for the smelter furnace off-gas system after Shang et al. [12] which are based on mass continuity, the First Law of Thermodynamics, and the ideal gas equation of state.

Furnace:

$$\left(\frac{1}{R} - \frac{1}{C_p}\right) V_f \frac{dP_f}{dt} = \left(T_{co} + \frac{H_{rf}}{C_p}\right) W_{co} + W_{fair} T_0 - T_f W_f \tag{22}$$

$$\left(\frac{C_p}{R} - 1\right) V_f \frac{P_f}{T_f} \frac{dT_f}{dt} = (C_p T_{co} + H_{rf}) W_{co} + W_{fair} C_p T_0 - (W_{co} + W_{fair})(C_p - R) T_f - R W_f T_f \tag{23}$$

$$(\rho V_f) \frac{dX_f}{dt} = \frac{28}{44} W_{co} - W_f X_f \tag{24}$$

$$L_c \frac{dW_{f1}}{dt} = (P_f - P_{c1}) a - k_c W_{f1}^2 \tag{25}$$

$$L_c \frac{dW_{f2}}{dt} = (P_f - P_{c2}) a - k_c W_{f2}^2 \tag{26}$$

$$\tau_w \frac{dW_{co}}{dt} = W_{coke} - W_{co} \tag{27}$$

$$W_f = W_{f1} + W_{f2} \tag{28}$$

$$W_{fair} = C_d A_{fleak} \sqrt{P_{atm} - P_f} \tag{29}$$

Cyclone #1:

$$\left(\frac{1}{R}-\frac{1}{C_p}\right)V_c\frac{dP_{c1}}{dt} = T_f W_{f1} - T_{c1}W_{c1} \tag{30}$$

$$\left(\frac{C_p}{R}-1\right)V_c\frac{P_{c1}}{T_{c1}}\frac{dT_{c1}}{dt} = W_{f1}C_p(T_f-T_{c1}) - (W_{c1}-W_{f1})RT_{c1} \tag{31}$$

$$(\rho V_c)\frac{dX_{c1}}{dt} = W_{f1}X_f - W_{c1}X_{c1} \tag{32}$$

$$L_{lv}\frac{dW_{c1}}{dt} = (P_{c1}-P_{lv1})a - k_{lv}W_{c1}^2 \tag{33}$$

Louver #1:

$$\left(\frac{1}{R}-\frac{1}{C_p}\right)V_{lv}\frac{dP_{lv1}}{dt} = T_{c1}W_{c1} - T_{lv1}W_{lv1} + W_{lvair1}T0 \tag{34}$$

$$\left(\frac{C_p}{R}-1\right)V_{lv}\frac{P_{lv1}}{T_{lv1}}\frac{dT_{lv1}}{dt} = W_{c1}C_p(T_{c1}-T_{lv1}) - (W_{lv1}-W_{c1} - W_{lvair1})RT_{lv1} + W_{lvair1}C_p(T_0-T_{lv1}) \tag{35}$$

$$(\rho V_{lv})\frac{dX_{lv1}}{dt} = W_{c1}X_f - W_{lv1}X_{lv1} \tag{36}$$

$$\tau_o\frac{dO_1}{dt} = O_{1ss} - O_1 \tag{37}$$

$$W_{lv1} = W_{\text{fan1}} \tag{38}$$

$$W_{lvair1} = O_1C_dA_{lvleak}\sqrt{P_{\text{atm}}-P_{lv1}} \tag{39}$$

Fan #1:

$$P_{\text{fan1}} - P_{lv1} = \alpha_{\text{fan}}N_{\text{fan1}}^2 \tag{40}$$

$$T_{\text{fan1}} = T_{lv1} \tag{41}$$

$$X_{\text{fan1}} = X_{lv1} \tag{42}$$

$$L_{\text{fan}}\frac{dW_{\text{fan1}}}{dt} = (P_{\text{fan1}}-P_{iCt})a - k_{\text{fan}}W_{\text{fan1}}^2 \tag{43}$$

Cyclone #2:

$$\left(\frac{1}{R}-\frac{1}{C_p}\right)V_c\frac{dP_{c2}}{dt} = T_f W_{f2} - T_{c2}W_{c2} \tag{44}$$

$$\left(\frac{C_p}{R}-1\right)V_c\frac{P_{c2}}{T_{c2}}\frac{dT_{c2}}{dt} = W_{f2}C_p(T_f-T_{c2}) - (W_{c2}-W_{f2})RT_{c2} \tag{45}$$

$$(\rho V_c)\frac{dX_{c2}}{dt} = W_{f2}X_f - W_{c2}X_{c2} \tag{46}$$

$$L_{lv}\frac{dW_{c2}}{dt} = (P_{c2}-P_{lv2})a - k_{lv}W_{c2}^2 \tag{47}$$

Louver #2:

$$\left(\frac{1}{R}-\frac{1}{C_p}\right)V_{lv}\frac{dP_{lv2}}{dt} = T_{c2}W_{c2} - T_{lv2}W_{lv2} + W_{lvair2}T0 \tag{48}$$

$$\left(\frac{C_p}{R}-1\right)V_{lv}\frac{P_{lv2}}{T_{lv2}}\frac{dT_{lv2}}{dt} = W_{c2}C_p(T_{c2}-T_{lv2}) - (W_{lv2}-W_{c2} - W_{lvair2})RT_{lv2} + W_{lvair2}C_p(T_0-T_{lv2}) \tag{49}$$

$$(\rho V_{lv})\frac{dX_{lv2}}{dt} = W_{c2}X_f - W_{lv2}X_{lv2} \tag{50}$$

$$\tau_o\frac{dO_2}{dt} = O_{2ss} - O_2 \tag{51}$$

$$W_{lv2} = W_{\text{fan2}} \tag{52}$$

$$W_{lvair2} = O_2C_dA_{lvleak}\sqrt{P_{\text{atm}}-P_{lv2}} \tag{53}$$

Fan #2:

$$P_{\text{fan2}} - P_{lv2} = \alpha_{\text{fan}}N_{\text{fan2}}^2 \tag{54}$$

$$T_{\text{fan2}} = T_{lv2} \tag{55}$$

$$X_{\text{fan2}} = X_{lv2} \tag{56}$$

$$L_{\text{fan}}\frac{dW_{\text{fan2}}}{dt} = (P_{\text{fan2}}-P_{iCt})a - k_{\text{fan}}W_{\text{fan2}}^2 \tag{57}$$

Cottrell inlet:

$$P_{iCt} = P_{\text{atm}} - k_{\text{cot}}W_{iCt}^2 \tag{58}$$

$$\begin{aligned}\left(\frac{C_p}{R}-1\right)V_{\text{fan}}\frac{P_{iCt}}{T_{iCt}}\frac{dT_{iCt}}{dt} = {} & W_{\text{fan1}}C_p(T_{\text{fan1}}-T_{iCt}) \\ & + W_{\text{fan2}}C_p(T_{\text{fan2}}-T_{iCt}) \\ & + W_{\text{conv}}C_p(T_{\text{conv}}-T_{iCt}) \\ & - (W_{iCt}-W_{\text{fan1}}-W_{\text{fan2}}-W_{\text{conv}})RT_{iCt}\end{aligned} \tag{59}$$

$$W_{iCt} = W_{\text{fan1}} + W_{\text{fan2}} + W_{\text{conv}} \tag{60}$$

References

[1] Marcuson SW. SO2 abatement from copper smelting operations: a 35 years perspective. In: 55th Canadian Chemical Engineering Conference. Toronto, Canada, 2005.

[2] Ciccone A, Storbeck J. Fugitive SO_2 and particulate emissions from a smelter complex. In: Air and Waste Management Association's Annual Meeting and Exhibition. Toronto, Canada, 1997; 97-FA161.06.

[3] Norgate TE, Jahanshahi S, Rankin WJ. Assessing the environmental impact of metal production processes. Journal of Cleaner Production 2007;15:838–48.

[4] Moors EHM, Mulderb KF, Vergragt PJ. Towards cleaner production: barriers and strategies in the base metals producing industry. Journal of Cleaner Production 2005;13:657–68.

[5] Hilson G. Pollution prevention and cleaner production in the mining industry: an analysis of current issues. Journal of Cleaner Production 2000;8:119–26.

[6] Bekker JG. Modelling and control of an electric arc furnace off-gas process, Master's dissertation. University of Pretoria, South Africa, 1999.

[7] Bekker JG, Craig IK, Pistorius PC. Model predictive control of an electric arc furnace off-gas process. Control Engineering Practice 2000;8(4):445–55.

[8] Kirschen M, Velikorodov V, Pfeifer H. Mathematical modelling of heat transfer in dedusting plants and comparison to off-gas measurements at electric arc furnaces. Energy 2006;31:2590–603.

[9] Pei-Shi S, Ping N, Wen-Biao S. Liquid-phase catalytic oxidation of smelting-gases containing SO_2 in low concentration. Journal of Cleaner Production 1998;6:323–7.
[10] Wilson TN, Berry ME, Butler JD, Crumbley T, Ware PW. Method of reducing emissions from a metal melting furnace. Journal of Cleaner Production 1996;4(3–4):234.
[11] Woodward L, Srinivasan B, Robitaille B, Perrier M. Real-time optimization of an off-gas distribution system of an iron and titanium plant. Computers and Chemical Engineering 2007;31:384–9.
[12] Shang H, Megan D, Nelson P, Salt B. Dynamic modelling of an industrial smelter furnace and converter off-gas system. American Journal of Environmental Sciences 2008;40(1):22–30.
[13] Stubina N, Chao J, Tan C. Recent electric furnace developments at Falconbridge (Sudbury operations). CIM Bulletin 1994:57–61.
[14] McKague AL, Norman GE. Operation of falconbridge's new smelting process. CIM Bulletin 1984:86–92.
[15] Celmer RS, Kaiura GH, Toguri JM. Chemical reactions during the electric smelting of nickel–copper calcines. Canadian Metallurgical Quarterly 1987;26(4):277–84.
[16] Skogestad S. Control structure design for complete chemical plants. Computers and Chemical Engineering 2004;28:219–34.
[17] Skogestad S. Plantwide control: the search for the self-optimizing control structure. Journal of Process Control 2000;10:487–507.
[18] Araujo A, Govatsmark M, Skogestad S. Application of plantwide control to the HDA process. I – steady-state optimization and self-optimizing control. Control Engineering Practice 2007;15:1222–37.
[19] Araujo A, Hori ES, Skogestad S. Application of Plantwide Control to the HDA Process. II – regulatory control. Industrial & Engineering Chemistry Research 2007;46:5159–74.
[20] Araujo A, Skogestad S. Control structure design for the ammonia synthesis process. Computers and Chemical Engineering 2008;32(12):2920–32.
[21] Luyben WL. Plantwide control of an isopropyl alcohol dehydration process. AIChE Journal 2006;52(6):2290–6.
[22] Jorgensen R. Fan engineering. Buffalo, New York, USA: Buffalo Forge Company; 1983.
[23] Maarleveld A, Rijnsdorp JE. Constraint control on distillation columns. Automatica 1970;6:51–8.
[24] Skogestad S. Simple analytic rules for model reduction and PID controller tuning. Modeling, Identification and Control 2004;25(2):85–120.